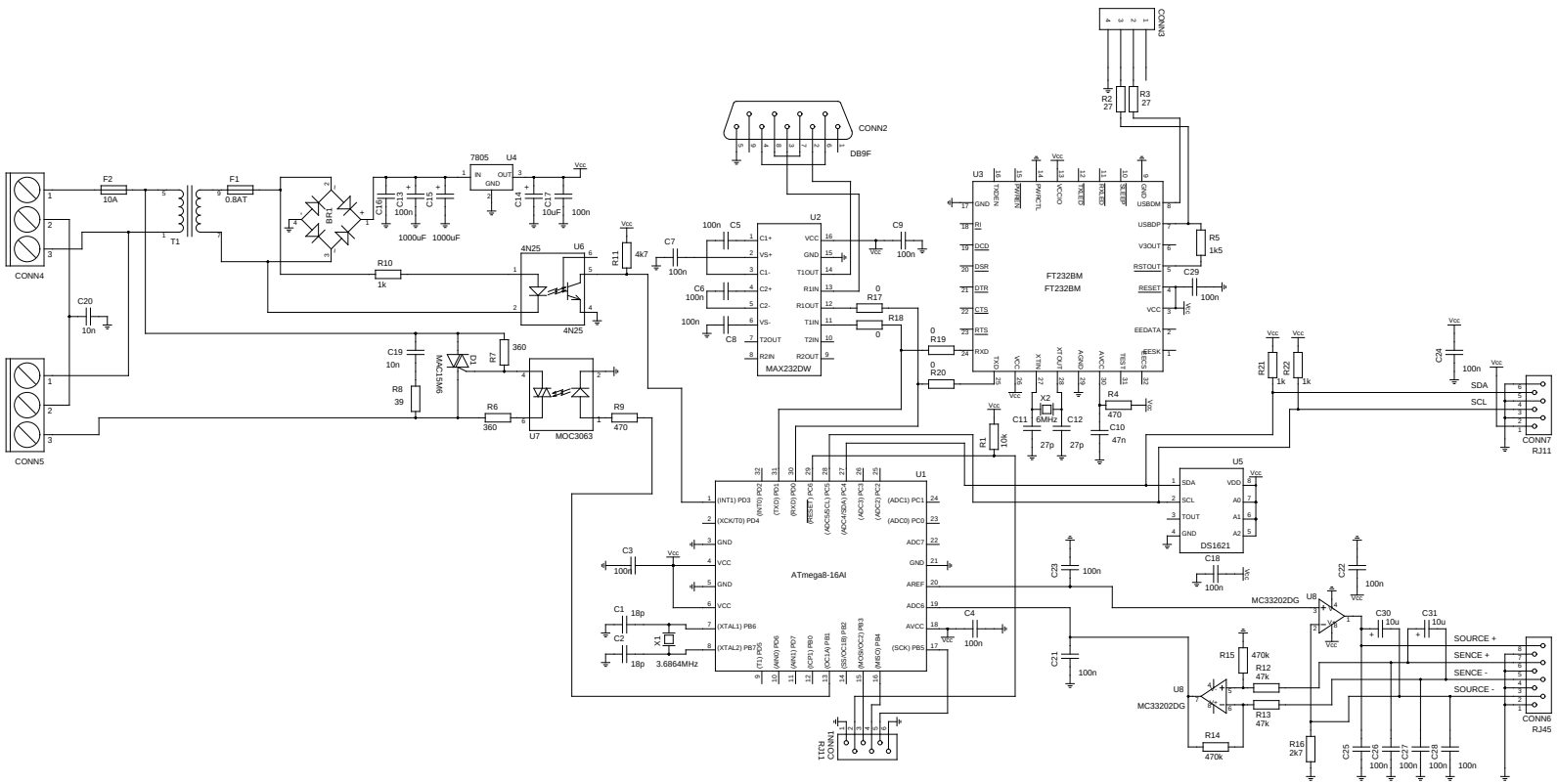

TITLE	The reflow oven		Mon Apr 3 19:46:19 CEST 2006
FILE:		REVISION:	V1.0
PAGE	1 OF 1	DRAWN BY:	Levente Kovacs